SB ACOUSTICS

5" SB13PFC25-4 / OEM Only

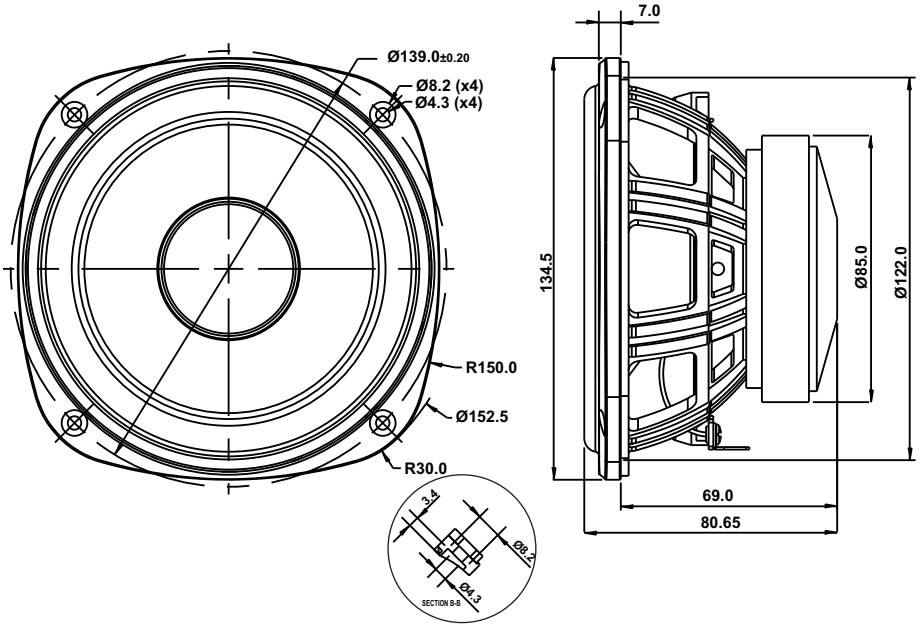

FEATURES

- Vented reinforced plastic chassis
- Proprietary cone material with natural fibers made in-house
- Soft low damping rubber surround for improved transient response
- Optimized motor system
- Vented coil former for low compression
- Non-resonant long life lead wires

Specs :

Nominal Impedance	4 Ω	Free air resonance, Fs	44 Hz
DC resistance, Re	3.2 Ω	Sensitivity (2.83 V / 1 m)	89 dB
Voice coil inductance, Le	0.56 mH	Mechanical Q-factor, Qms	2.6
Effective piston area, Sd	87 cm^2	Electrical Q-factor, Qes	0.33
Voice coil diameter	25.4 mm	Total Q-factor, Qts	0.29
Voice coil height	14 mm	Moving mass incl.air, Mms	10.5 g
Air gap height	5 mm	Force factor, Bl	5.3 Tm
Linear coil travel (p-p)	9 mm	Equivalent volume, Vas	13.4 liters
Magnetic flux density	1.06 T	Compliance, Cms	1.25 mm/N
Magnet weight	0.36 kg	Mechanical loss, Rms	1.1 kg/s
Net weight	0.89 kg	Rated power handling*	40 W

* IEC 268-5, T/S parameters measured on drive units that are broken in.

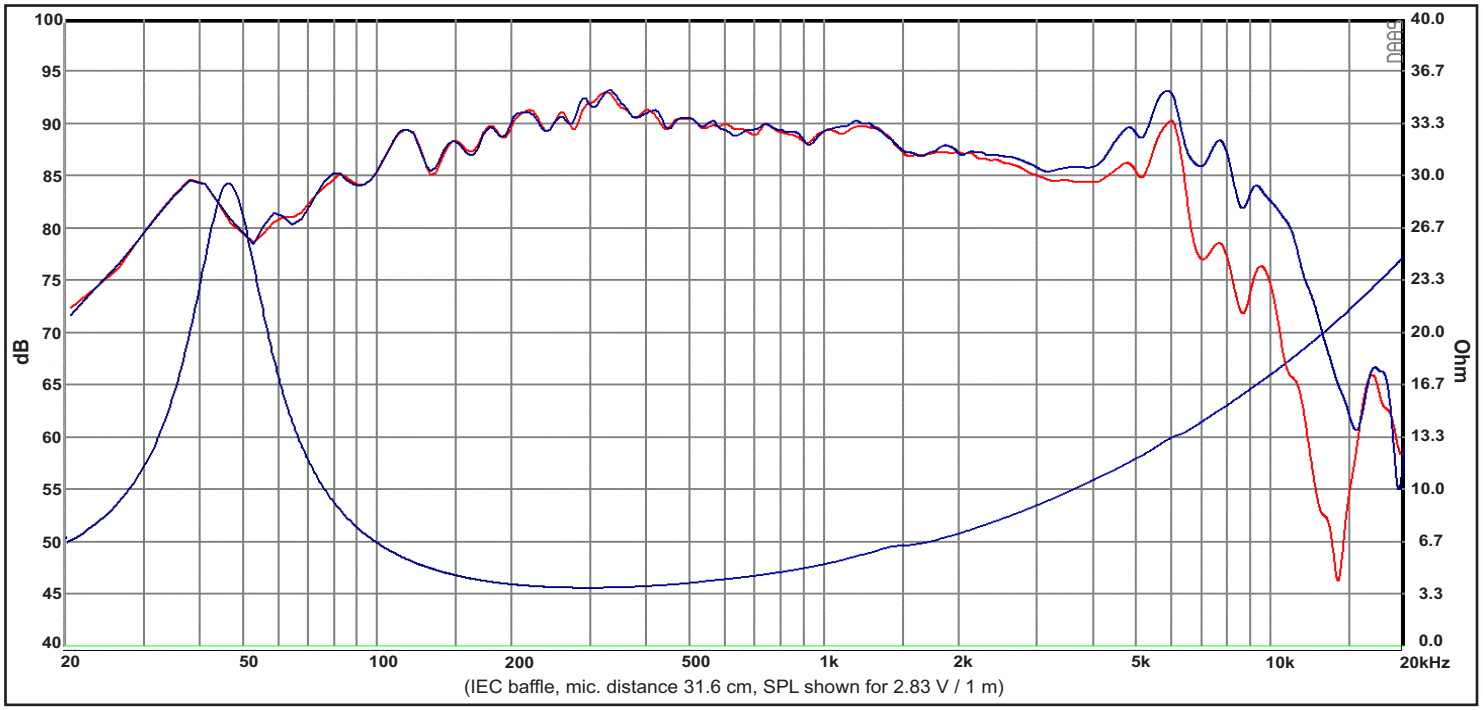

Response Curve :

(Blue) : on axis

(Red) : 20° off-axis

Rev.1 (14.03.2017)